ELECTRICAL, AUDIO, FRONT - Z26S4D92AN/AH/BN/BH (C750845)

2026 RZR - RZR PRO S4 ULTIMATE (R01) - Z26S4D92AN/AH/BN/BH

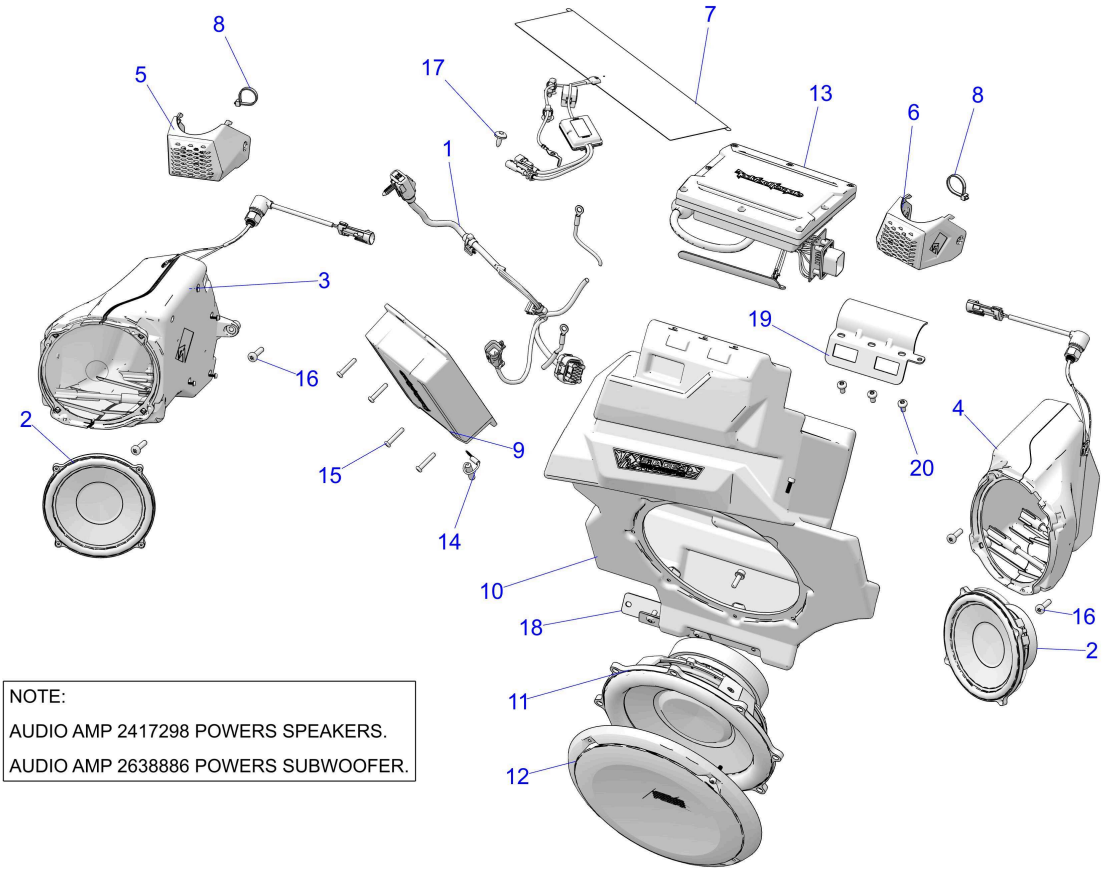

NOTE:
AUDIO AMP 2417298 POWERS SPEAKERS.
AUDIO AMP 2638886 POWERS SUBWOOFER.

© 2025 Polaris Industries Inc.

C750845

Reference #	*Part#*	*Description*	*Quantity*
1	2416190	HARNESS-AUDIO,SUB	1
2	2417186	ASM-SPEAKER,WOOFER,6.5,V2	2
3	2417262	ASM-SPKR,FRONT,LH	1
4	2417263	ASM-SPKR,FRONT,RH	1
5	2417264	ASM-SPKR,TWEETER,LH	1
6	2417265	ASM-SPKR,TWEETER,RH	1
7	4081622	ANTENNA,AM-FM	1
8	7080761	CABLE-TIE,10-102MM,WEATH.-RES.	2
9	2417298	ASM-AMP,4CH,CP,400W,RF	1
10	2417520	ASM-SPKR,SUBWOOFER,10IN [INCL. 11-13,18,19,21]	1
11	2414649	ASM-SPEAKER,SUB,10"	1
12	2414937	ASM-GRILL,10" SUB	1
13	2638886	ASM-AMP,SUBWOOFER,400W	1
14	4018709	JUMPER,AMP GROUND	1
15	7512078	SCR-10X1.12 TX PN PLS-Y	4
16	7518158	SCR-#14X1 HI/LO-PH-PN TRX-M	4
17	7518936	SCR-M6X1X16 TR/TX-M	1
18	5274757-329	BRKT-SUB,LOWER,ECOAT	1

19	5271837	BRKT-SUBWOOFER	1
20	7527910	SCREW-SUBWOOFER	3

Copyright 1996-2026 Polaris Industries U.S.A All rights reserved.